VEZINA AVE.

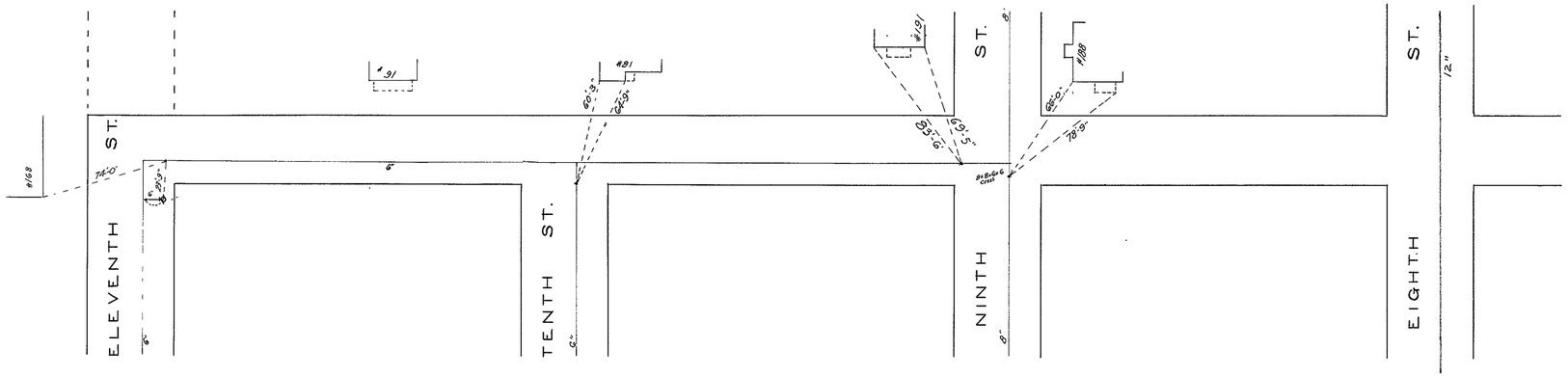
ELEVENTH ST.
TENTH ST.
NINTH ST.
EIGHTH ST.
#168
74'-0"
#91
#181
#191
#188
60'-3"
64'-9"
83'-6"
69'-5"
66'-0"
78'-9"
12"
6"
8"

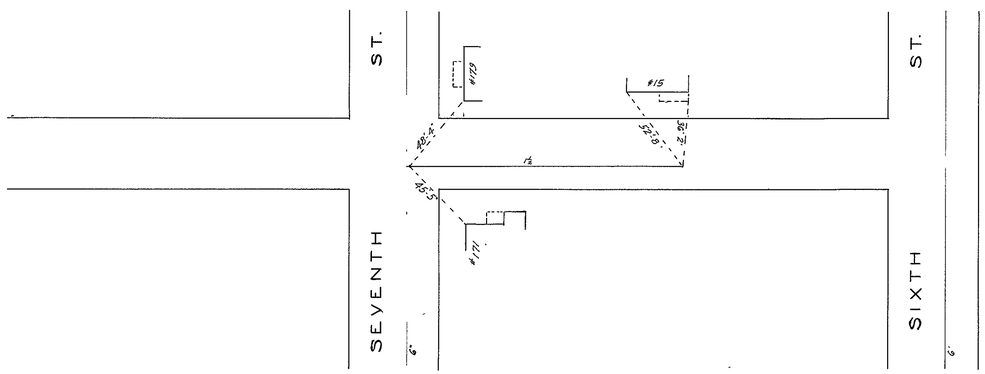
SEVENTH ST.
SIXTH ST.
#179
#15
#171
48'-4"
52'-8"
36'-2"
45'-5"
1½
6"