COLUMBUS ST.

Alterations
Extended 6" D.I.C.L.

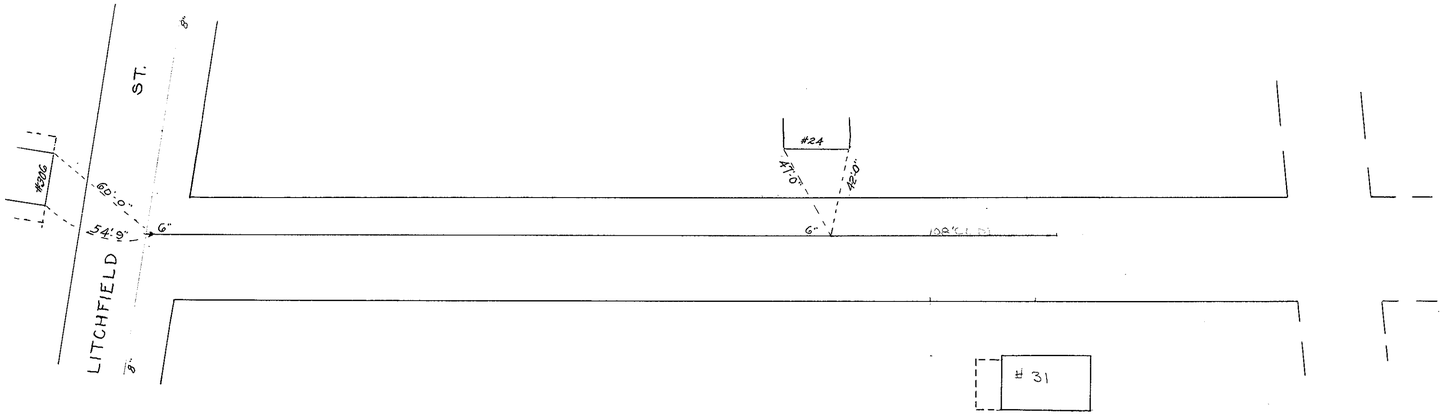

CALZA ST.

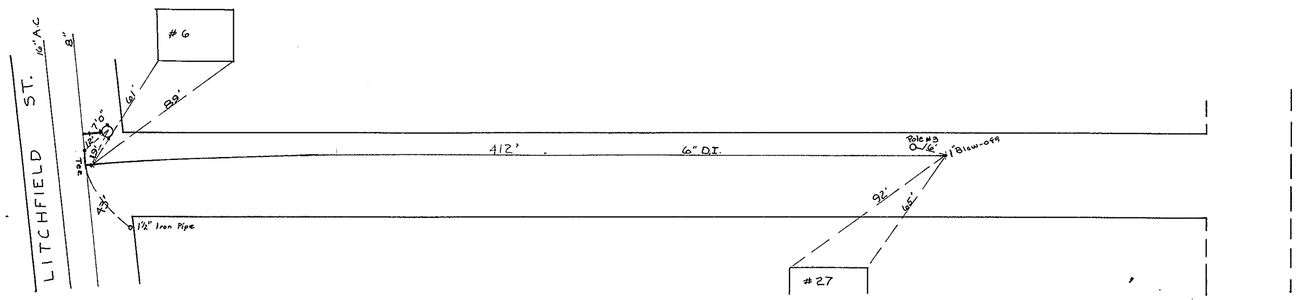

JUL 9 1976