PLEASANT ST.

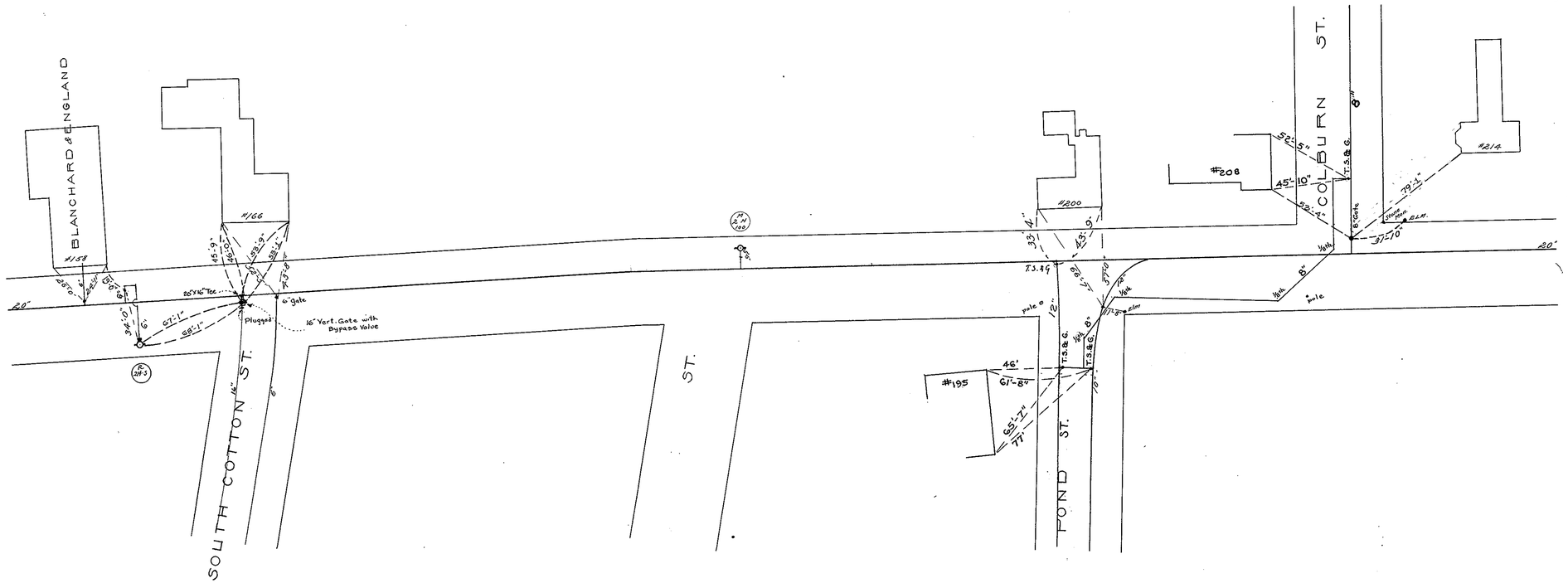

Alteration: 12/14/76 - 16" South Cotton St.

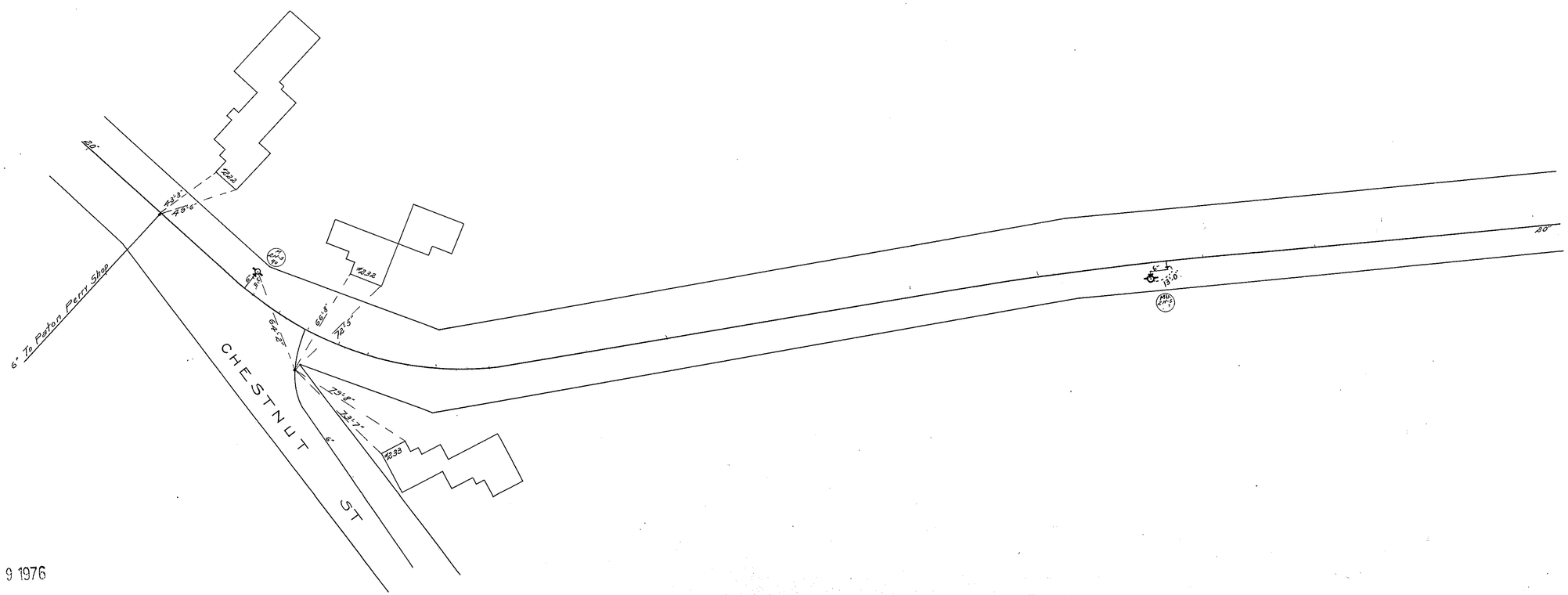

JUL 9 1976