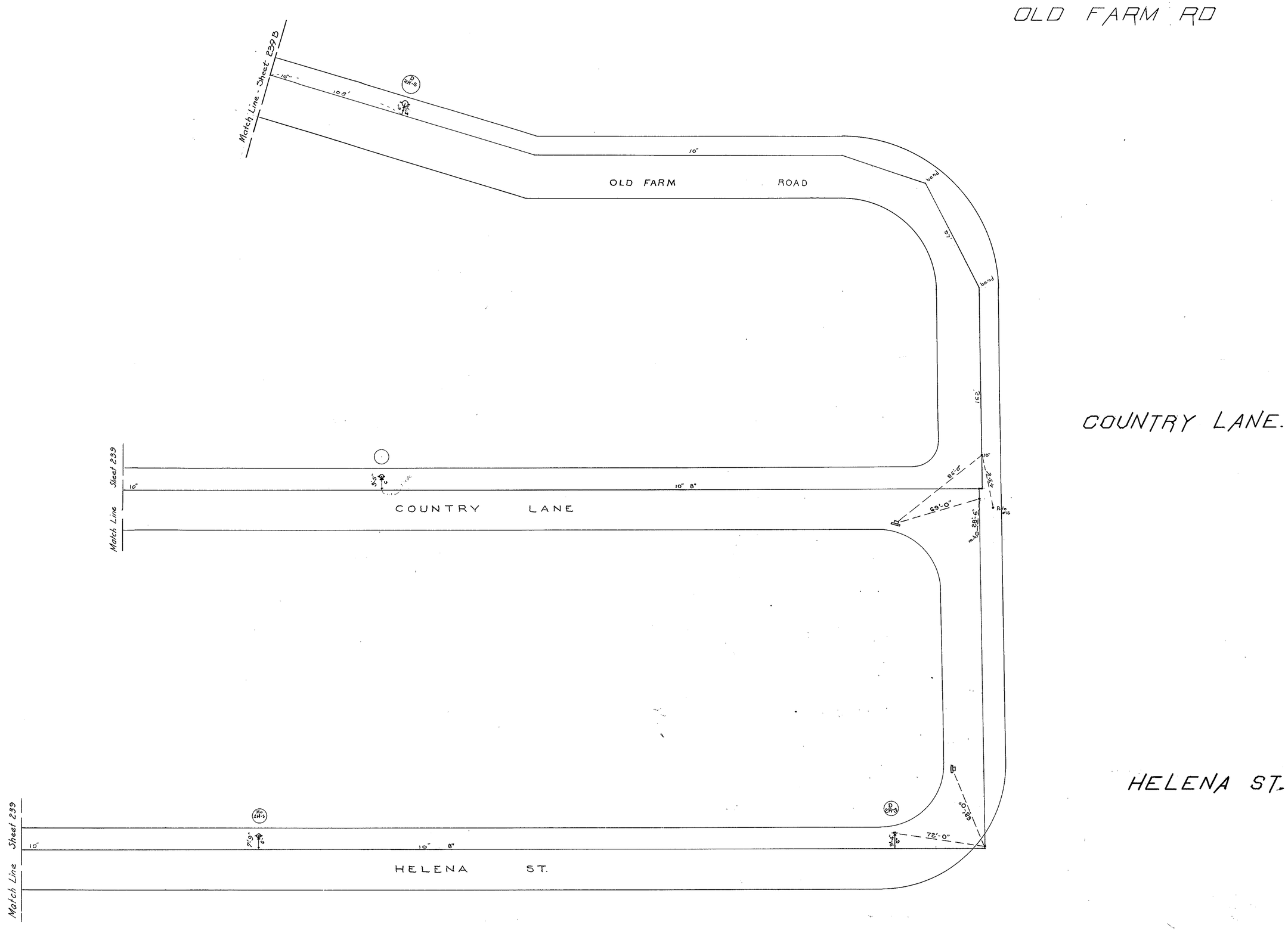
OLD FARM RD
Match Line - Sheet 239 B
OLD FARM ROAD
bend
bend
COUNTRY LANE.
Match Line Sheet 239
COUNTRY LANE
HELENA ST.
Match Line Sheet 239
HELENA ST.

JUL 9 1976