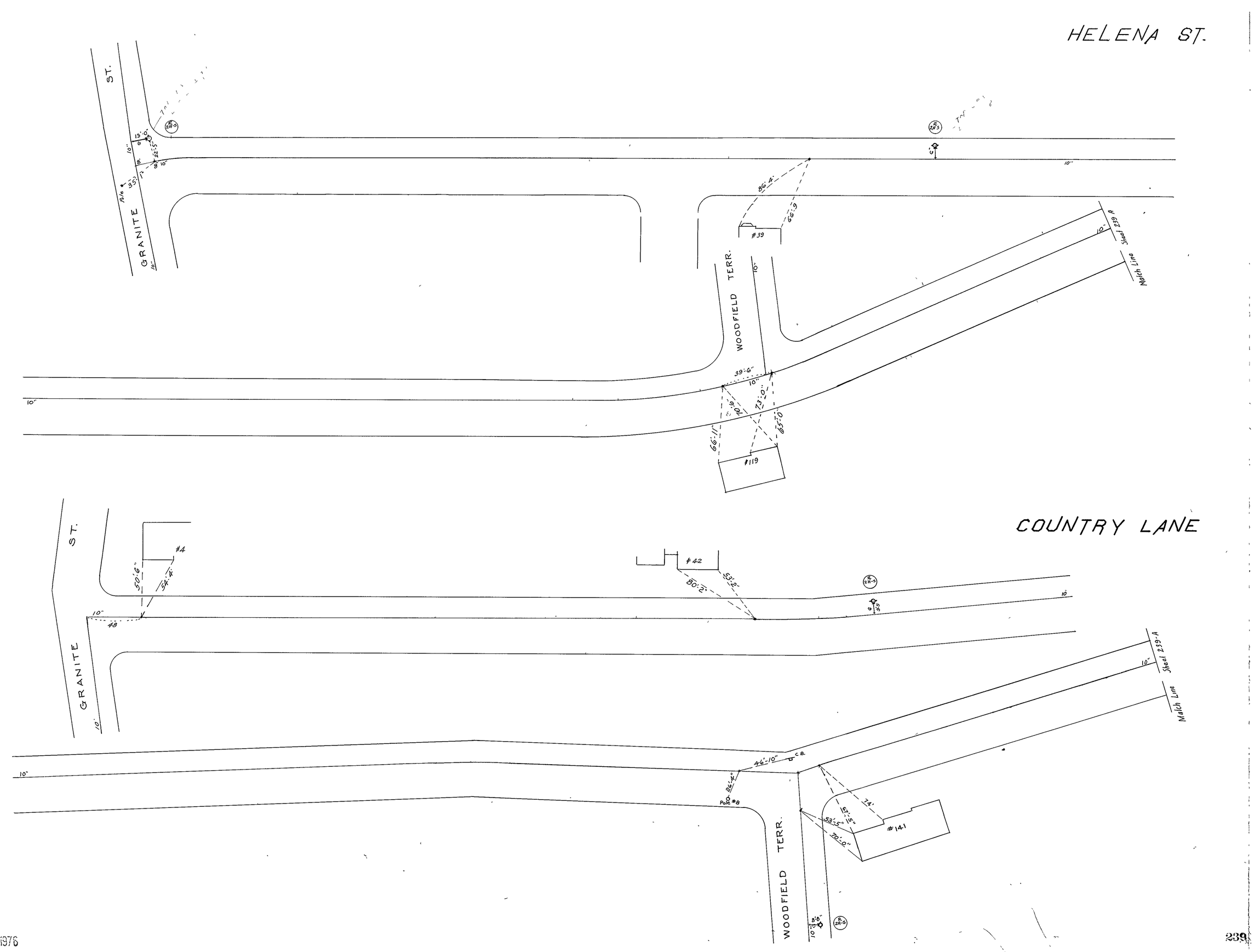
HELENA ST.
GRANITE ST.
WOODFIELD TERR.
#39
#119
Sheet 239 A
Match Line
COUNTRY LANE
GRANITE ST.
#4
#42
#141
WOODFIELD TERR.
Pole #8
Sheet 239-A
Match Line

JUL 9 1976