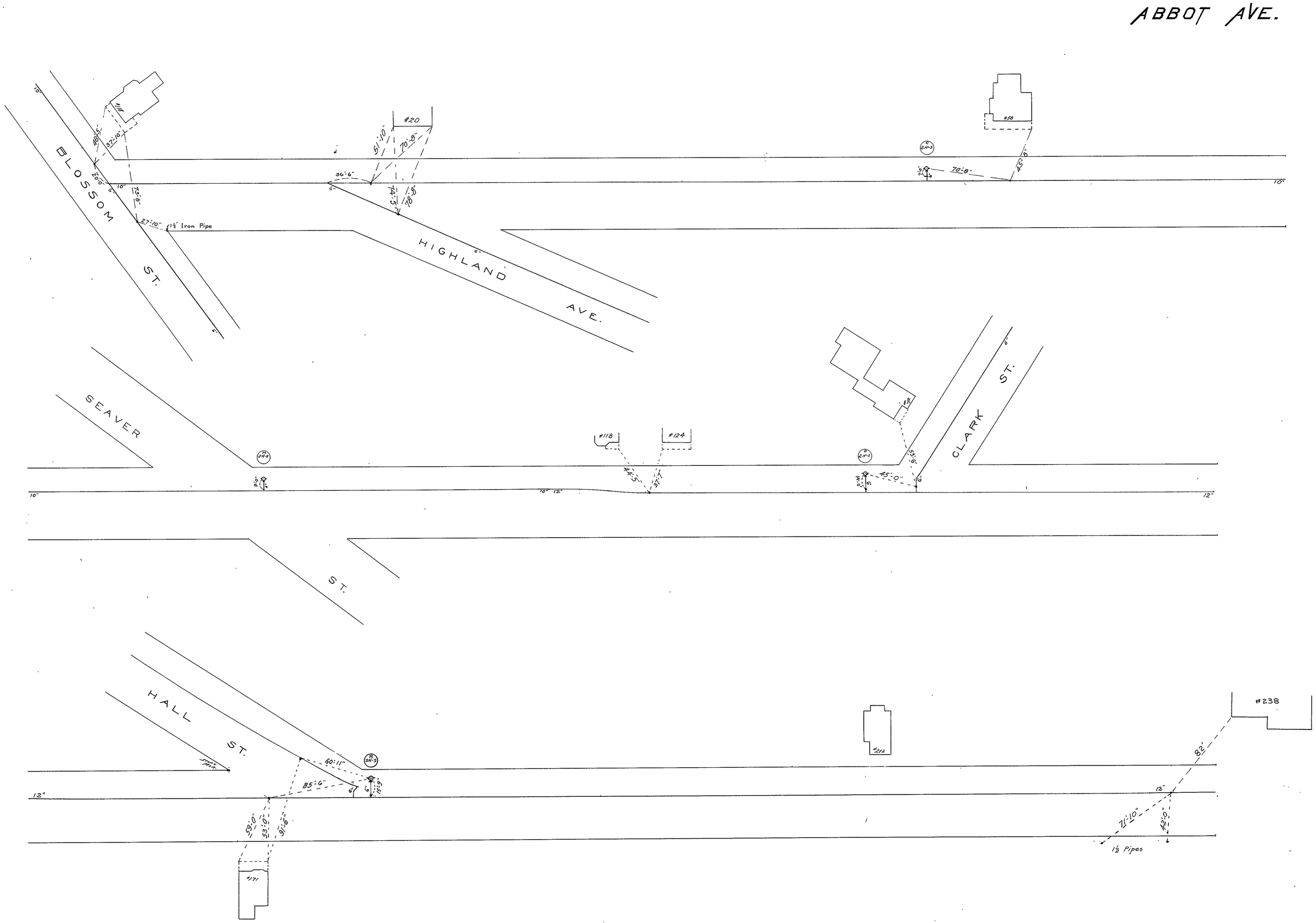
ABBOT AVE.
BLOSSOM ST.
HIGHLAND AVE.
SEAVER ST.
CLARK ST.
HALL ST.
#20
#118
#124
#238
#171
#212
1½" Iron Pipe
1½ Pipes

JUL 9 1976