GREEN MOUNTAIN AVE.

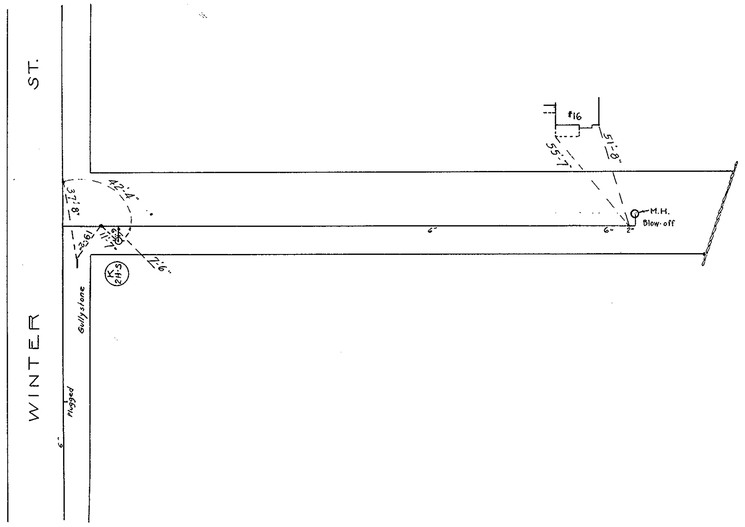

WINTER PLACE.

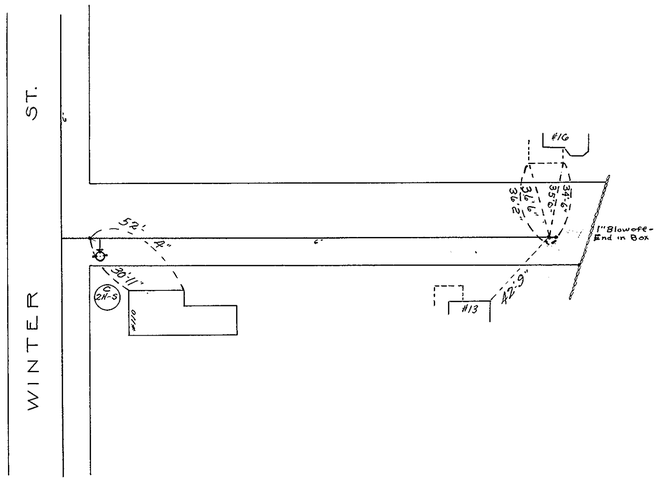

Altered Blowoff 3/78

JUL 9 1976