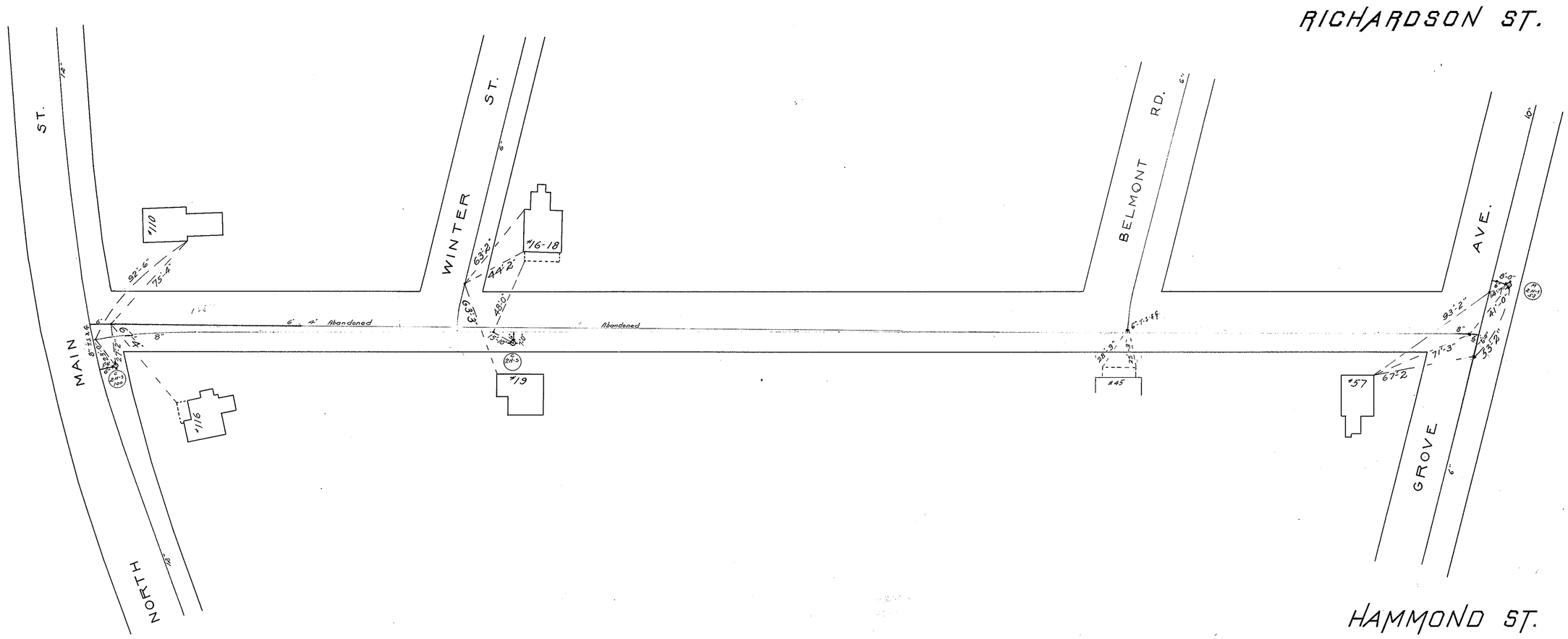
RICHARDSON ST.
MAIN ST.
WINTER ST.
BELMONT RD.
GROVE AVE.
HAMMOND ST.
#110
#16-18
#19
#16
#45
#57
Abandoned
Abandoned

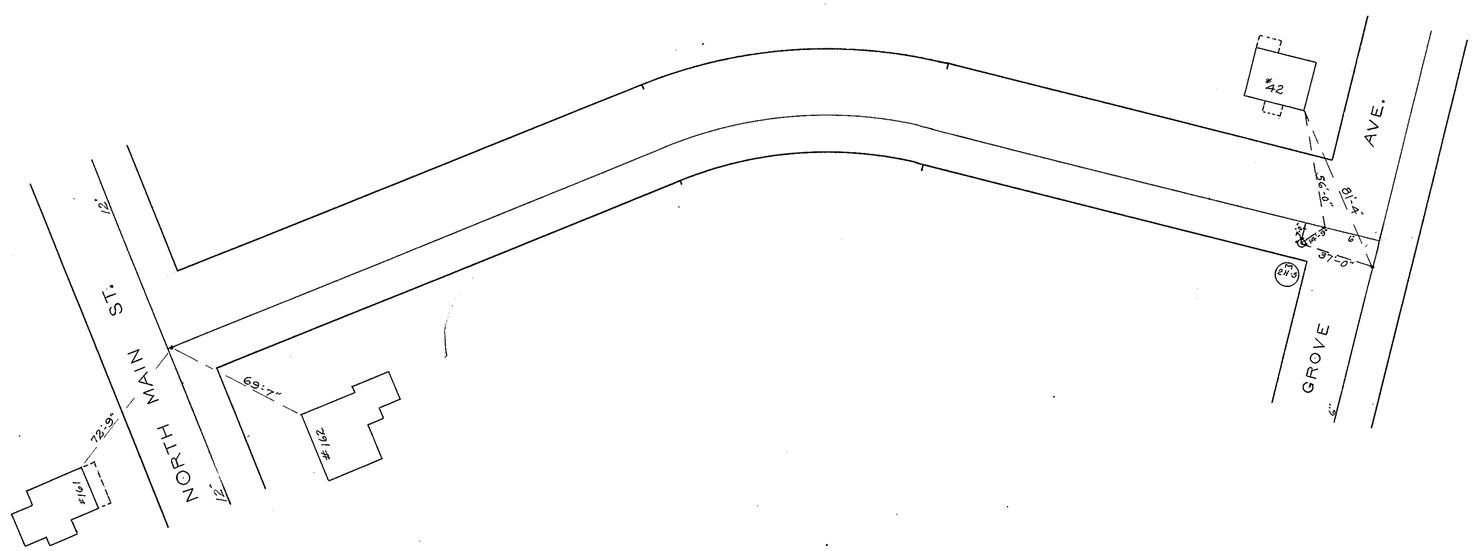
NORTH MAIN ST.
GROVE AVE.
#42
#101
#102