JUL 9 1976

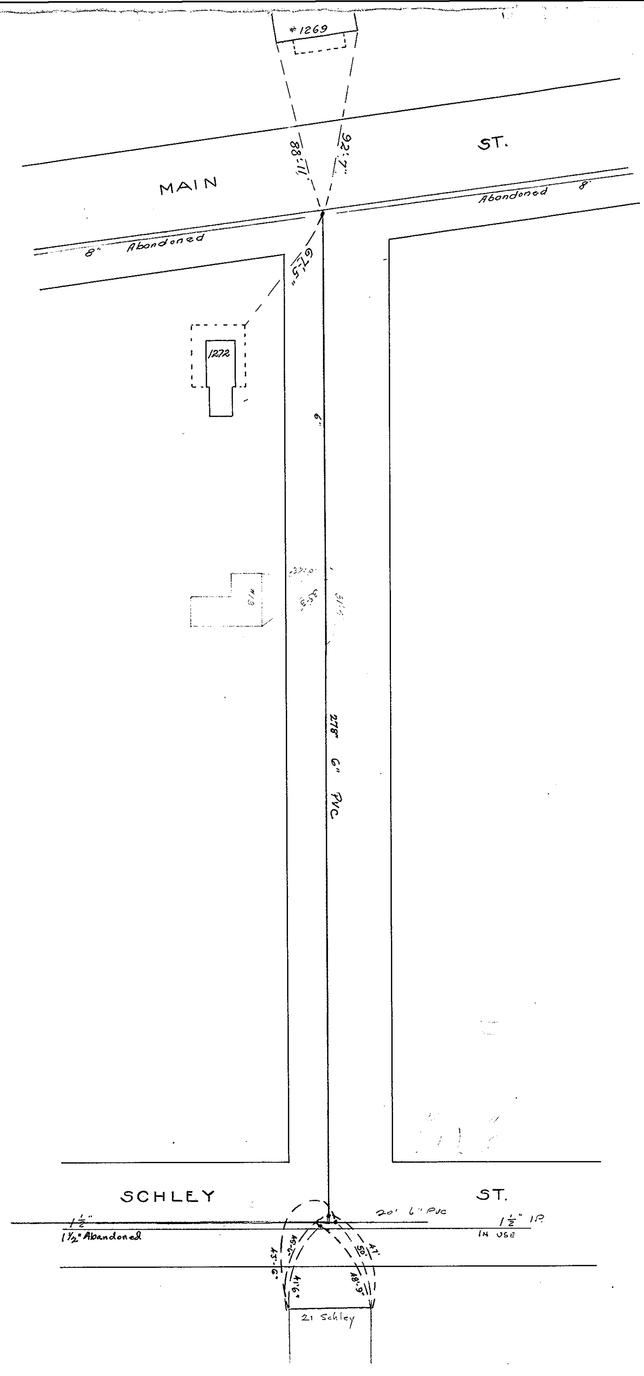

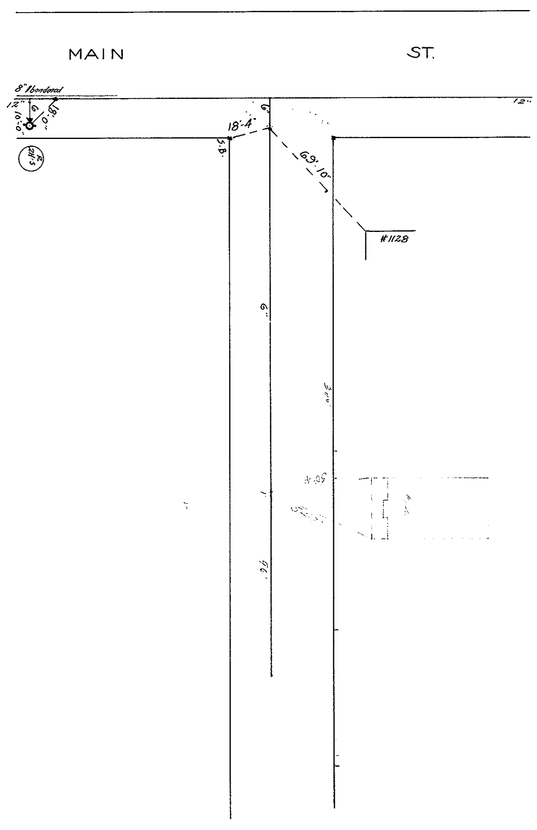

WARREN AVE.

DEWEY ST.