D-340

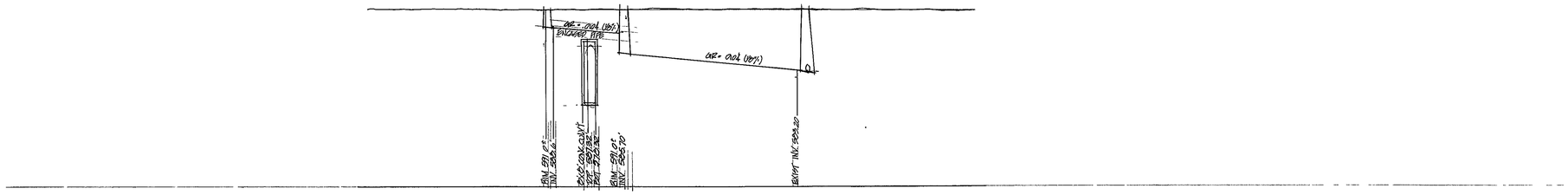

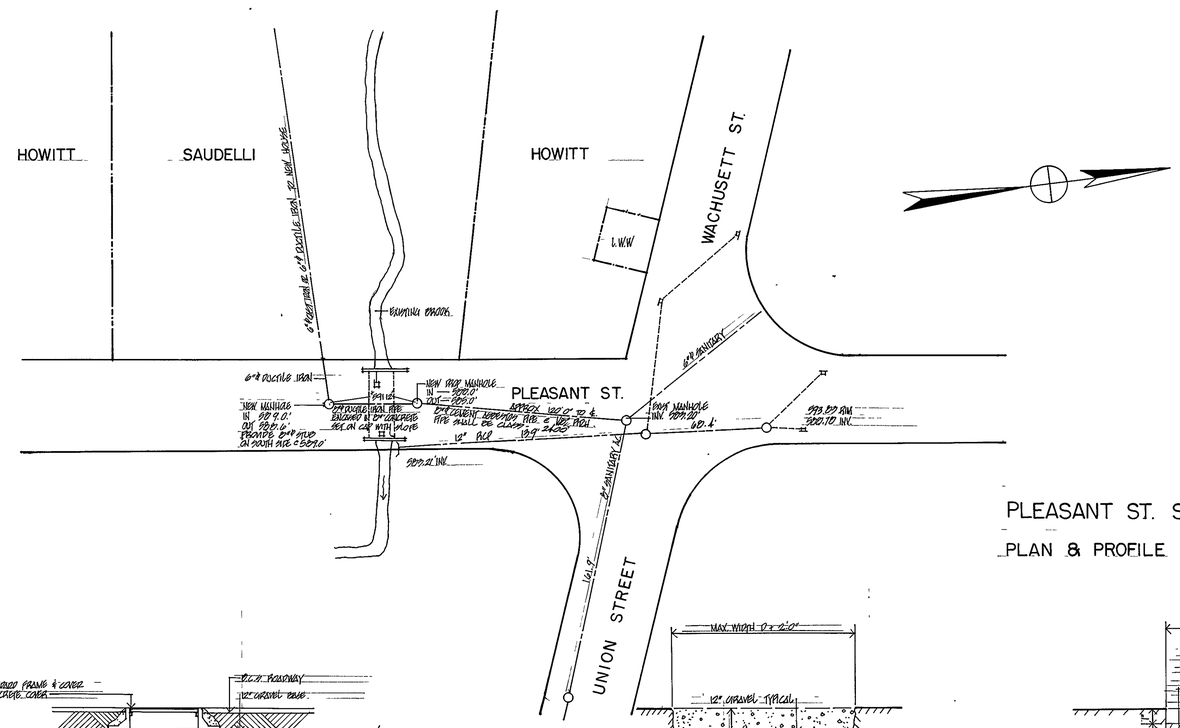

PLEASANT ST. SEWER EXTENSION LEOMINSTER, MA.

PLAN & PROFILE scales 1"=40'-0" HORIZ. 1"=8'-0" VERT. 7-23-79

Rev 7-31-79

Install but not As-built
As of this Date 3/80

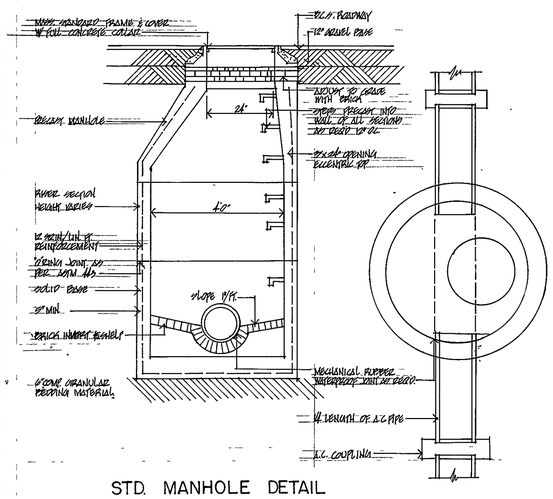

STD. MANHOLE DETAIL

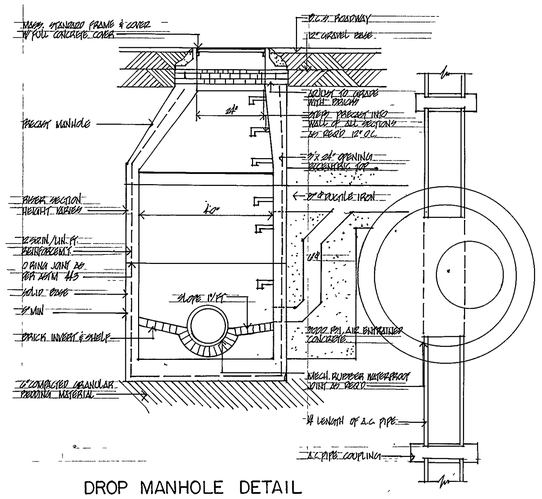

DROP MANHOLE DETAIL

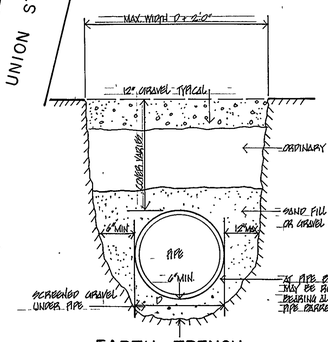

EARTH TRENCH

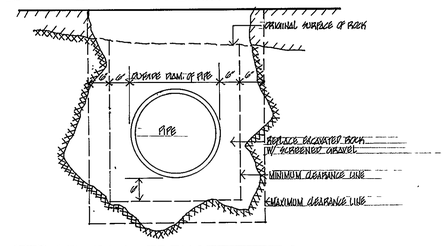

ROCK TRENCH

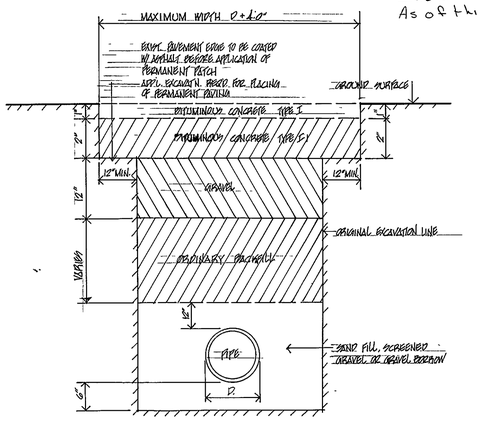

STREET TRENCH

NOTES:
TRENCH DETAILS ARE STANDARD CITY OF LEOMINSTER DETAILS. CONTRACTOR SHALL COMPLY EXACTLY AS SHOWN

CONTRACTOR SHALL VERIFY ALL GRADES, INVERTS & DIMENSIONS PRIOR TO COMMENCING WORK.

D 340